Journal of Physics: Conference Series

PAPER • **OPEN ACCESS**

Design and Operation of Fuzzy Logic Based MPPT Controller under Uncertain Condition

To cite this article: Lalit Kumar Narwat and Javed Dhillon 2021 *J. Phys.: Conf. Ser.* **1854** 012035

View the article online for updates and enhancements.

You may also like

- Optimal control for a photovoltaic integrated grid system using PSO and modified whale optimization to enhance power quality
Anurag Tiwari and Ruchi Agarwal

- Performance of Artificial Neural Network and Particle Swarm Optimization Technique based Maximum Power Point Tracking for Photovoltaic System Under Different Environmental Conditions
Said Zakaria Said and Lamine Thiaw

- Fuzzy Maximum Power Point Tracking (MPPT) controller for photovoltaic system on mini greenhouse
R I Putri, H Setiawan, B Irawan et al.

This content was downloaded from IP address 45.127.58.152 on 21/04/2023 at 06:01

Design and Operation of Fuzzy Logic Based MPPT Controller under Uncertain Condition

***Lalit Kumar Narwat and Javed Dhillon**
School of Electronics and Electrical Engineering, Lovely Professional University, Phagwara, Punjab
Email id: lalitnarwat1998@gmail.com*, javeddah@gmail.com

Abstract- Maximum power point tracking System (MPPT) is so important in PV systems to increase the efficiency of solar cells. So many methods are proposed to generate the maximum voltage from PV modules under different weather conditions. This paper proposed an intelligent method for maximum power point tracking using the P & O algorithm. The model contains a PV module connected to DC to DC boost converter. The PV System is tested under disturbance in the solar irradiation and temperature level. The simulation results show the maximum power tracker could track the maximum power accurately and successfully in all conditions tested. Comparison of various working parameters such as: tracking efficiency and response time of the system shows that the proposed method gives higher efficiency and better performance than the conventional perturbation and observation method. The voltage, current, and power of the Module can be measured through the P&O Method. The Fuzzy logic based Mppt controller is proposed in this method to increase the voltage Pv module. The proposed method used the fuzzy logic-based controlled (FLC) to initiate the control command to the output buck-boost converter as there is a change in the voltage and current across the PV panel. The modeling of the FLC-based MPPT controller is done for the PV module with the help of MATLAB/SIMULINK.

1. Introduction

Energy not only plays an important role in our life but also in the overall economy of the country. The requirement for energy is increasing in our daily life due to the industrial revolution. In the most developing country like India, the large share of energy generation mainly depends upon non-renewable energy sources. The gradual depletion of these sources such as fossil fuels, oils, etc. leading the developing countries towards the un-sustainability of civilization. Along with that, the generation of energy through conventional sources is also a reason for greenhouse gases. It has become a global challenge to reduce the emission of greenhouse gasses like CO2 and CO3 to ensured secure, clean, and affordable energy. Whereas clean and sustainable energy is perfectly generated through renewable energy sources [3]. There are many renewable sources of energy such as solar energy, wind energy, Hydro energy, etc. The Photovoltaic (PV) system is the most efficient renewable source of energy which has taken the great attention of the researchers. Solar energy is a source of energy that is clean, Pollution free, maintenance-free, and no noise produced due to the absence of moving parts [1, 3]. However, two important factors limit the implementation the solar energy. The cost of installation and low efficiency of energy conversion. To have control over these factors which means solar system installation cost and to increase the efficiency of the photovoltaic power system, the maximum power point tracking system (MPPT) of photovoltaic modules is one of the most effective methods. MPPT is used to extract the maximum power of the PV module and provide it to the load to increase its efficiency [1, 2, and 5]. There are different techniques to maximize the output power of PV modules. One of the methods is the constant voltage tracking method. This method compares the measured voltage of the PV module with a reference voltage to continuously alter the duty cycle of the DC-DC converter and hence operate the PV module at the predetermined point close to the MPPT.

A very simple method is the CVT (Constant Voltage Tracking) Method. It can track the maximum power point under uncertain conditions. There is an alternate method to obtain the Maximum Power Point of the PV Module i.e. P&O (Perturbation and Observation) Method. The voltage, current, and power of the Module can be measured through the P&O Method. Then it perturbs the voltage to change the direction towards the maximum voltage. This method has a slow speed of tracking and also high oscillations around the MPPT [2, 4, and 6]. This paper presents a new method based MPPT controller to obtain maximum power point tracking.

2. Characteristics of Solar Module

To create a PV panel, it is required to understand the characteristics of a solar module. An electrical equivalent circuit describes the model characteristic of the module. The solar cell contains two types of resistance. One is the series resistance and the other is parallel resistance [7, 8]. The resistance in series is associated with the losses in the path of current due to the metal grid and current connecting bus. The other resistance i.e. parallel

Content from this work may be used under the terms of the Creative Commons Attribution 3.0 licence. Any further distribution of this work must maintain attribution to the author(s) and the title of the work, journal citation and DOI.
Published under licence by IOP Publishing Ltd

resistance is used to represent the small leakage of current through the resistive path across the p-n junction. Fig. 1 shows the equivalent circuit flow of a PV Cell.

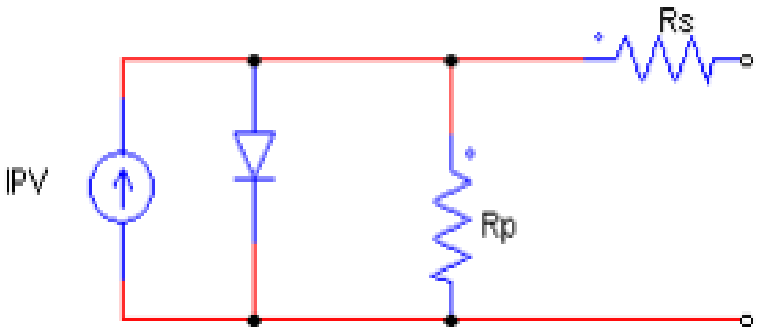

Fig. 1 Equivalent Circuit of PV Cell.

In this paper, the Soltech 1STH-FRL-4H-250-M60- BLK PV module is chosen for the proposed model in Simulink/Matlab. The specification of PV Module i.e. Soltech 1STH-FRL-4H-250-M60-BLK under the given parameters of a PV Module is displayed in Table 1, where Fig. 2 and Fig. 3. show the power output of P-V module w.r.t voltage at a different level of solar irradiance and the temperature.

Table.1. PV module parameters

Maximum Power(Pmax)	175.42W
The voltage at Pmax (Vmp)	35.8V
Current at Pmax (Imp)	4.9A
Open Circuit Voltage (Voc)	44.2V
Short Circuit Current (ISC)	5.4A
Temperature coefficient of Isc	-0.398 ± 0.113 %

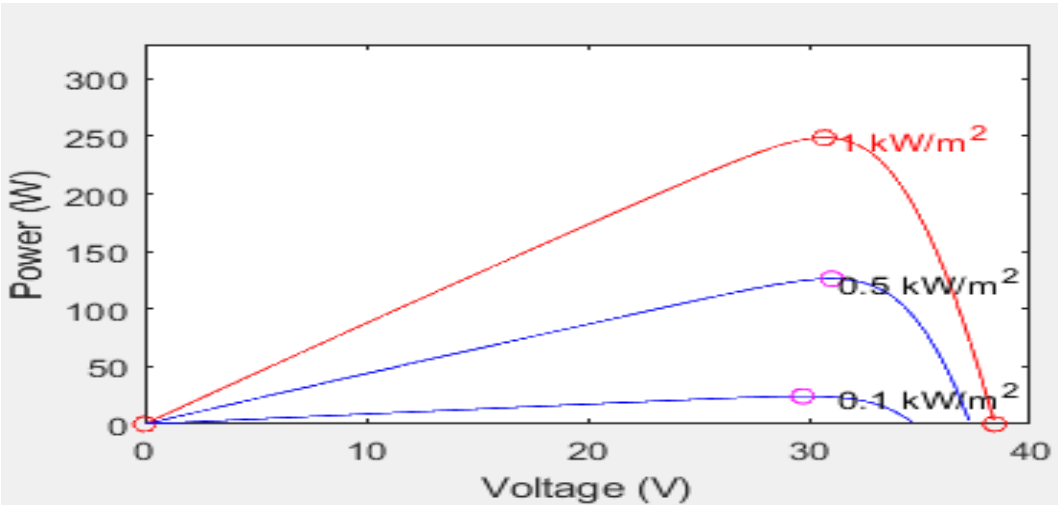

Fig. 2. P-V Curves under changing in Solar Radiations

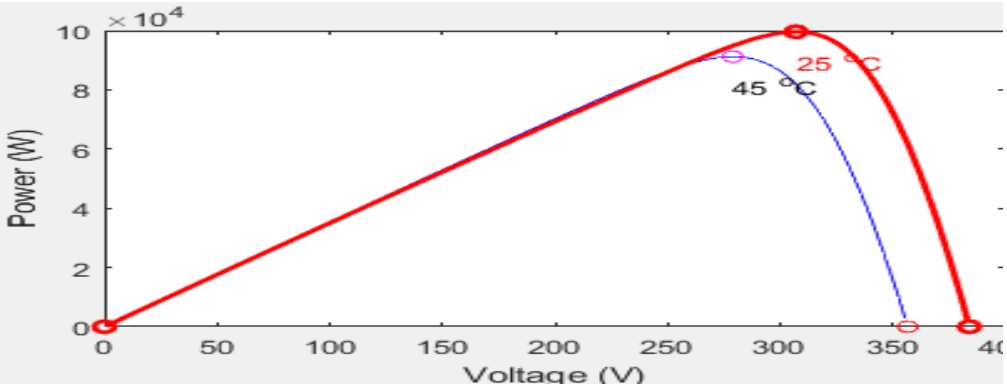

Fig.3 P-V curves under changes in Temperature.

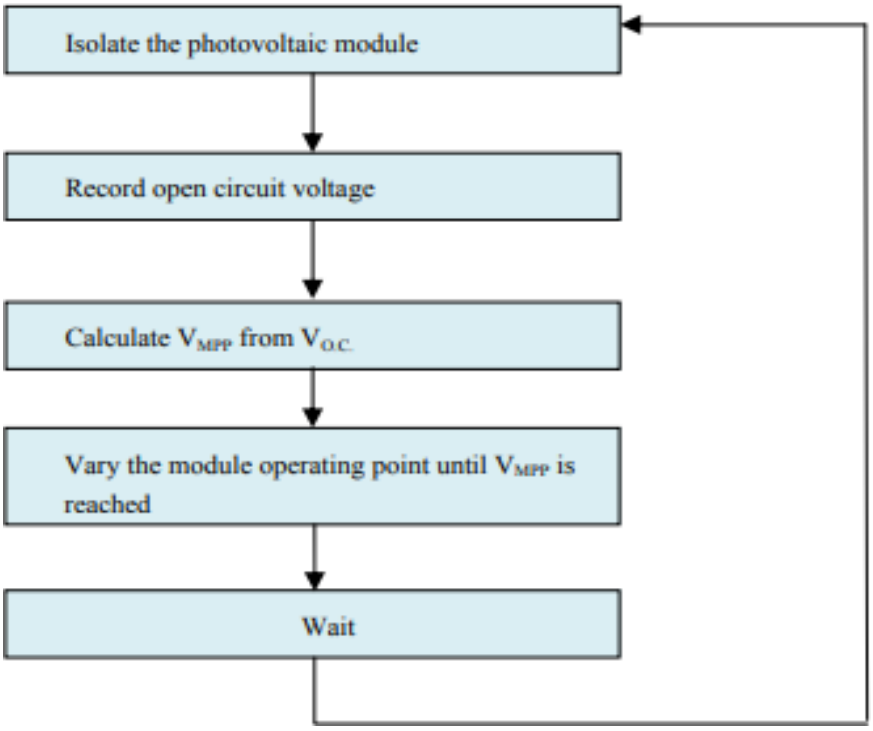

Fig.4. Open circuit voltage algorithm flowchart.

2.1. P & O (Perturb and Observe) Method

A perturbation and observation method is the most effective method used for the tracking of maximum PowerPoint. This method obtains the MPP by continuously repeating increase and decrease in the output voltage at the specific point of the solar PV module. This method is a very simple and efficient means of solar tracking at MPP. The functioning of this method depends on the change in the output voltage from the PV Module. The tracking process is done in this way i.e. the output voltage at a point in the PV module is compared with the previous voltage at the previous point in the solar cell. Then depending upon the increase and decrease in the voltage the algorithm works.

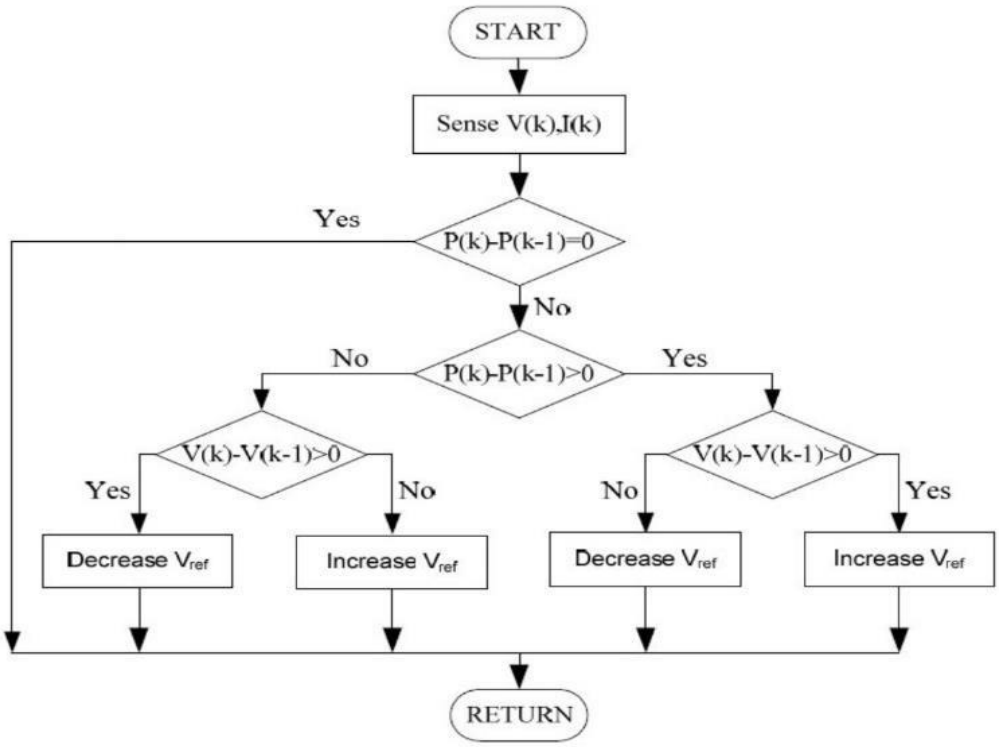

Fig.5 The flow chart of the P&O algorithm.

3. DC-DC Buck-Boost converter

The DC to DC Buck-Boost converter is an electronics circuit that is used to transfer one level of DC to another level. There are various types of DC to DC converter. The Buck-Boost DC to DC converter is the most popularly used DC to DC converter. It can work in both ways either to step up or step down the DC to DC voltage by changing the switch duty ratios. The operation of buck-boost converter in SMPS (Switching Mode Power Supply) Mode. It works on the duty ratio when it is less than 50% than the output voltage is less than the input voltage and vice versa.

The operation of the dc to dc Buck-boost converter is as follows:

- When the T1 transistor is turned ON, then the diode is reverse-biased and being in a non-conducting state. Turning on the transistor T1 is examined during the 0 < t < DTS interval.

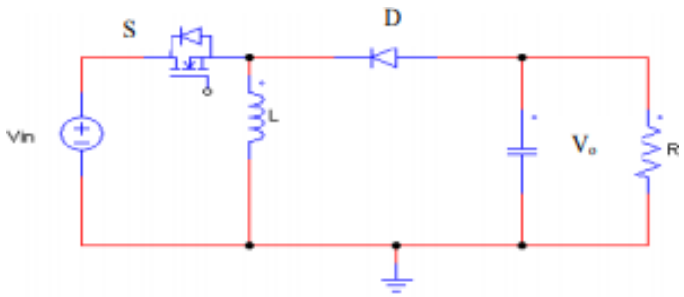

Fig.6. The Buck-Boast Converter.

- When the T1 transistor is turned off, then the diode is in the conducting mode. It is known for steady-state operation. The net charge in the current inductorshould be Zero during a single switching cycle. When turning on the transistor T1 is then examined during DTS< t < TS interval [11].

4. The MPPT based Fuzzy logic controller

Renewable energy resources have a wide range of applications for the Fuzzy Logic controllers (FLC). From the last decade, the requirement of FLC has been increased due to simplicity. FLC also deals with the imprecise input, which does not need any accurate mathematical model for the controller. FLC can easily handle nonlinearity conditions for obtaining the maximum power from PV Modules. It is capable of performing in any weather condition or any change in the temperature or irradiance level [8].

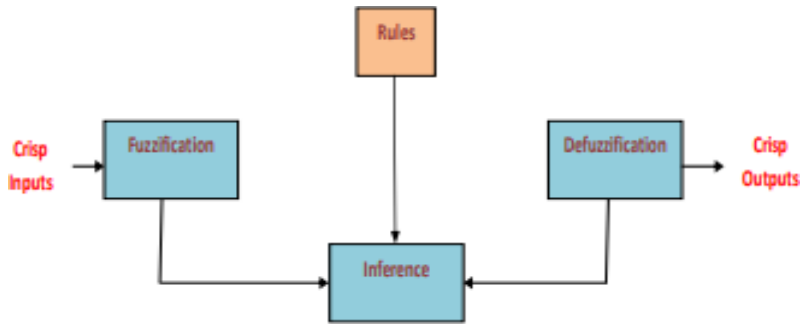

Fig.7. The Stages of Fuzzy Logic controller

Fuzzy logic controller process can be assorted into three categories:-

1. Fuzzification
2. Rule Evaluation
3. Defuzzification.

The First Category i.e. Fuzzification it takes the crisp input, for example, the change in input voltage levels. After taking the Crisp Input, it converts into fuzzy input with the stored membership function. When the fuzzy values are designed then, the first stage of FLC i.e fuzzification takes place.

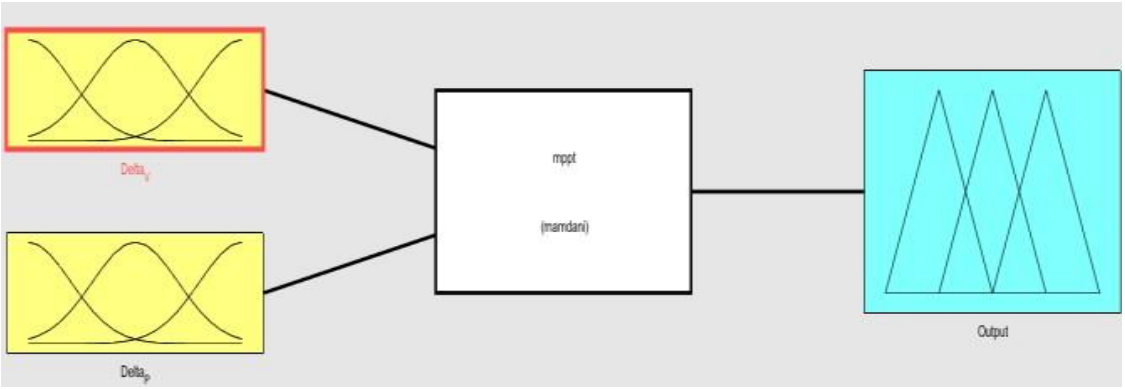

Fig.8. The FLC

The second category: - of Fuzzy logic controller is rule evaluation. The rule evaluation involves the fuzzy processor which uses the lingual rules for the determination of the controlling action which occurs during the response given to the set of input values. The Rule Evaluation always gives fuzzy output in the result of every action. The last category in the fuzzy logic controller process is the Defuzzification Technique. In defuzzification, the fuzzy value is converted into a crisp value. The expected value of the output is always the crisp value from the fuzzy set. In the FLC Process, every fuzzy output variable is changed effectively w.r.t. the output membership function for each input set. The center of gravity (COG) is the most used defuzzification technique, it is also called the centroid method [8, 10]. In this project, the Fuzzy logic controller is used in the MPPT controller connected to the P&O algorithm. The involvement of FLC in MPPT increases the output voltage and it is very simple to design a Fuzzy Logic Controller which does not require much knowledge about the exact requirement of the model. It just requires the rule to be assigned to each set of the membership function [8-13].

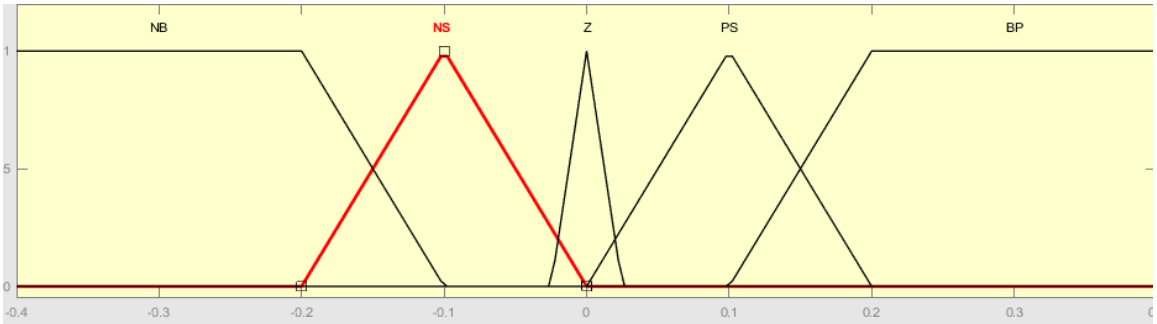

Fig.9. Membership function of input Variable Delta_P

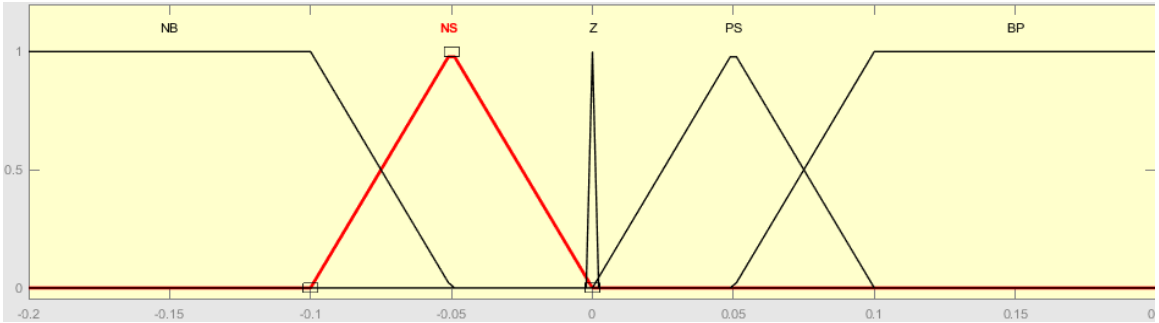

Fig.10. Membership function of input Variable Delta_V

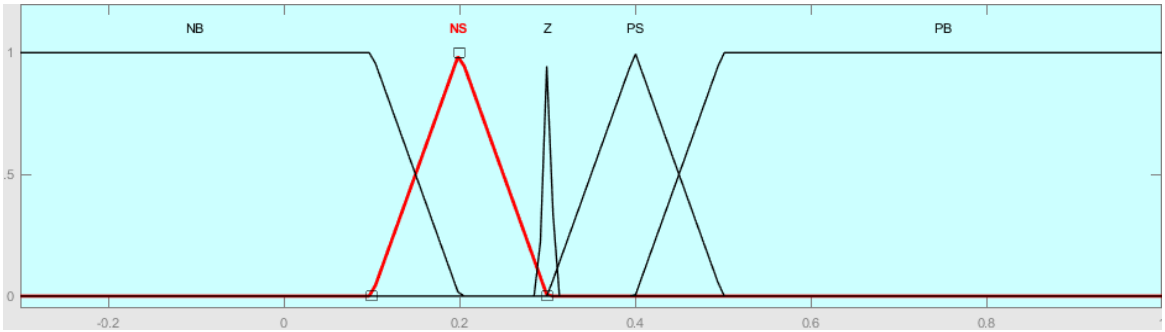

Fig.11. Membership function of Output Variable Delta_Y

In this paper, the new method is introduced which requires the FLC for designing an MPPT of the PV Module under uncertain conditions. After using this method, it decreases the oscillation around the Maximum PowerPoint. The functioning of this method is better as compared to the simple P&O algorithm Method. There are two inputs given to the Fuzzy logic controller i.e. Change in voltage of a PV Module (Delta_V) and Change in Power of a PV module (Delta_P). The output from the fuzzy logic controller is delta Y. The output of the Fuzzy logic controller is given to the sampling signal which modifies the signal and gives it to the boost converter for providing the switching pulses [14].

4.1. Rule Evaluation

The rule provided to the MPPT block in FLC design has divided the input variable and output variable into different levels: - NB (negative big), NS (negative small), ZE (Zero), PB (Positive big), PS (positive small).

The Variables are provided to the Sampling Sequence are provide w.r.t. sampling time. While the Fuzzification process is performing it convert numerical input to the lingual variable which is based on membership function. The design of rules of MPPT is on the fact which involve the change in voltage that causes the Power to increase while designing the rules. The moving of the change is always kept in the same direction as there is an increase otherwise if decrease the next change is in the other direction. After the theoretical designing of the membership function and rules were adjusted with the errors to obtain the maximum performance [15-17].

Table.2. Rule-Based used in FLC

ΔV \ ΔP	NB	NS	Z	PS	PB
NB	PB	PS	NB	NS	NS
NS	PS	PS	NB	NS	NS
Z	NS	NS	NS	PB	PB
PS	NS	PB	PS	NB	PB
PB	NB	NB	PB	PS	PB

5. Simulation Results

In this Simulation Model, the comparison of the introduced method i.e. Design and operation of the fuzzy logic-based MPPT Controller is done with the Simple P&O method under uncertain conditions. The uncertain condition of the device is provided through the signal builder block in the SIMULINK/Matlab. The evaluation is performed by comparing the results to find out the best efficient and accurate method for tracking the maximum power under uncertain conditions. The Model is designed using the software MATLAB/SIMULINK.

The Model contains the PV module i.e. 1Soltech 1STH- FRL-4H-250-M60-BLK. The output of the PV Module is connected to the DC-DC Buck-Boost converter which contains the electric drive i.e. MOSFET which gets the gate signal pulse from the Fuzzy Logic Based Mppt Controller. The controller is designed to track the maximum power from the PV Module under uncertain conditions. The uncertain conditions can be the change in the temperature and irradiance level. As the uncertainty is provided through a signal block which contains the various input signal to the PV Module. The uncertainty for both the method is similar so for the better comparison.

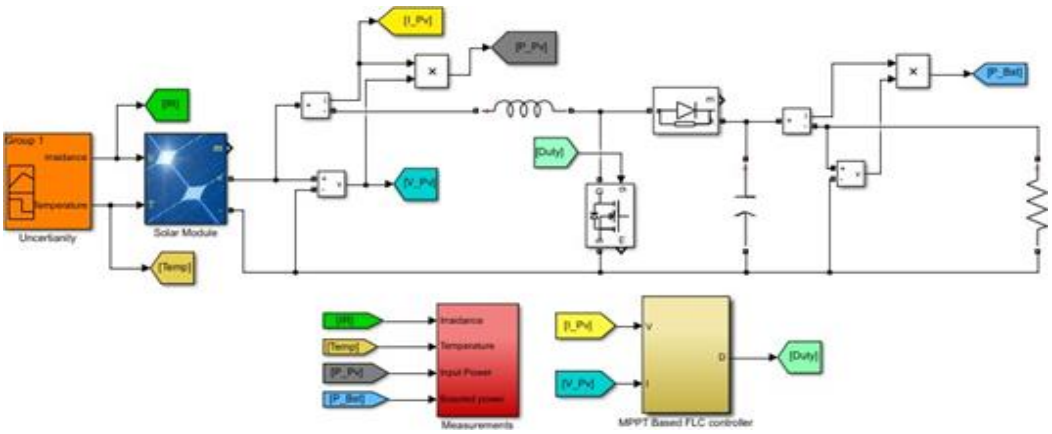

Fig.12. Simulation Model of The FLC Based MPPT control

5.1. Uncertainty Block

This block gives the uncertainty signal to the PV Module. The uncertainty is the different weather conditions or can be the radiations or temperature at a different level. The temperature provided to the PV module are at different temperature range shows in Fig.14 and the different irradiance levels show the Fig.13.

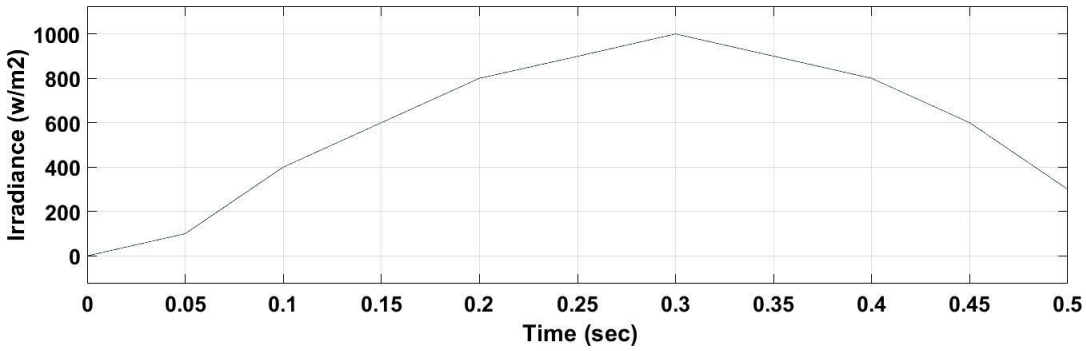

Fig.13. Irradiance Input Signal

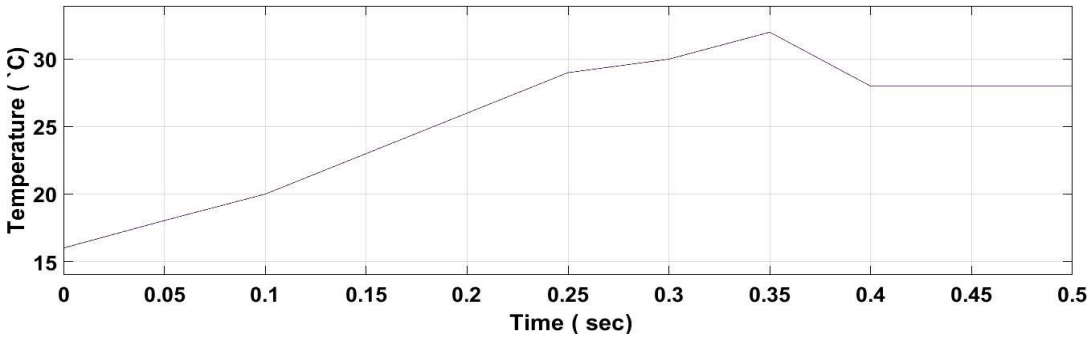

Fig.14. Temperature Input Signal

The temperature and the irradiance i.e. solar radiation Change continuously in a unit step with a sample time sequence as shown in figure.13 and 14. The irradiance level starts from 10W/m2 and continuously goes up to 1000W/m2 till the time 0.5 sec. while going from 10W/m2 to 1000W/m2 the irradiance level

keeps on changing at different time intervals. The same is with the temperature as the time irradiance level increases the temperature decreases after a certain unit period. The Temperature starts from the 30 degree Celsius and decreases to 10 degree Celsius. The temperature decreases at a certain period.

5.2. P&O Based Mppt Controller.

In this case, the Simple P&O algorithm based Mppt controller is connected in the Model the output of the Mppt controller is given to the gate duty of the DC to DC buck-boost converter. The input uncertainty signal given to the PV Module is shown in Figure.13 and 14.

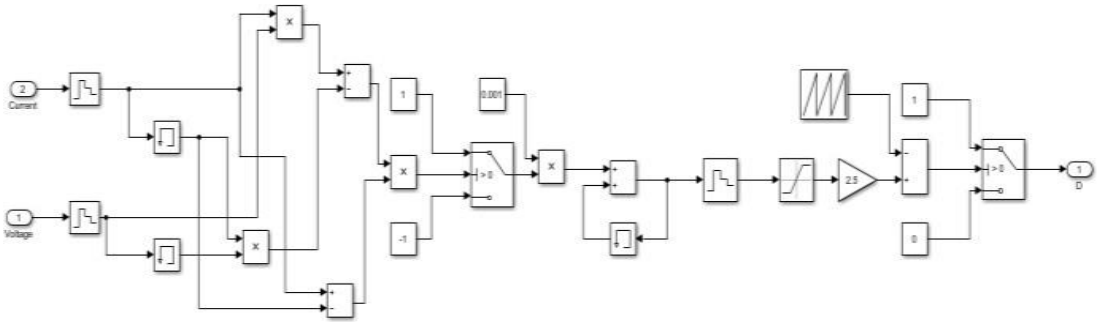

Fig.15 P & O algorithm Matlab/Simulink

The model of the p & o method is shown in figure.15 which shows that the input to the method is voltage and current. The output of the model is then given to the gate circuit of the buck-boost converter. It is seen that the output voltage and current from the solar module are 356 volts and 3.56 ampere this is depending on the Maximum uncertainty signal the voltage and current are not fixed it varies with the input to the PV Module. The output from the PV Module of voltage and the current signal is then given to the P&O algorithm.

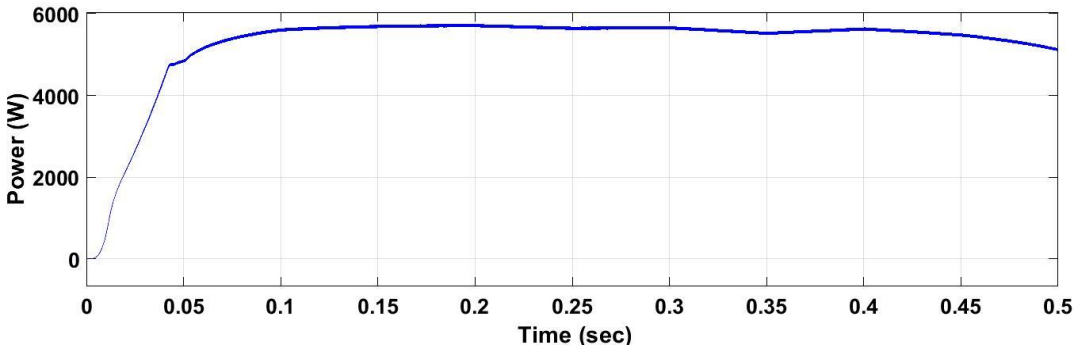

Fig.16. Boasted Output Power V-I graph using P&O Based Mppt

After the completion of the simulation the output current and voltage boasted are 751.6 volts and 7.516 amperes this is depending on the Maximum uncertainty signal the voltage and current are not fixed it varies with the input to the PV Module. This is the increase in the output shown in Fig.16 level after using the P&O Based MPPT Controller.

5.3. Fuzzy Logic Based MPPT Controller.

This case is the proposed method i.e. the fuzzy logic-based Mppt Controller. In this case, the Fuzzy logic controller is connected to the Mppt controller's P&O algorithm so to obtain the maximum power point tracking. The fuzzy logic controller contains the stored membership file and the rules-based evaluation. The output of the Fuzzy logic Mppt controller is provided as the gate pulse to the DC to DC

buck-boost converter. In this case, the same PV module is used with the same uncertainty signal the output of the PV module is 356 volts and 3.56 ampere this is depending on the Maximum uncertainty signal the voltage and current are not fixed it varies with the input to the PV Module. The output from the PV Module of voltage and the current signal is then given to the Fuzzy Logic Based MPPT controller this the proposed method for the maximum power point tracking of the solar PV Module.

Fig.17. FLC based method

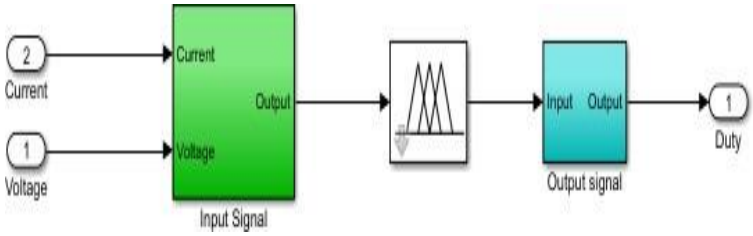

In this model, the fuzzy logic controller is connected to the MPPT algorithm. The fuzzy logic controller contains the stored MPPT file which contains the rules and membership functions to obtain the maximum output voltage from the solar PV module. The input to the fuzzy block is given from the input signal block which given the signal of change in voltage and change in power to the fuzzy logic controller and then the output of the fuzzy logic controller is given to the output block which modulates the signal by the proper repeated sequencing signal. Then the output is given to the gate drive i.e. to the buck-boost converter. The output of the fuzzy logic controller depends on the stored membership function and rule evaluations.

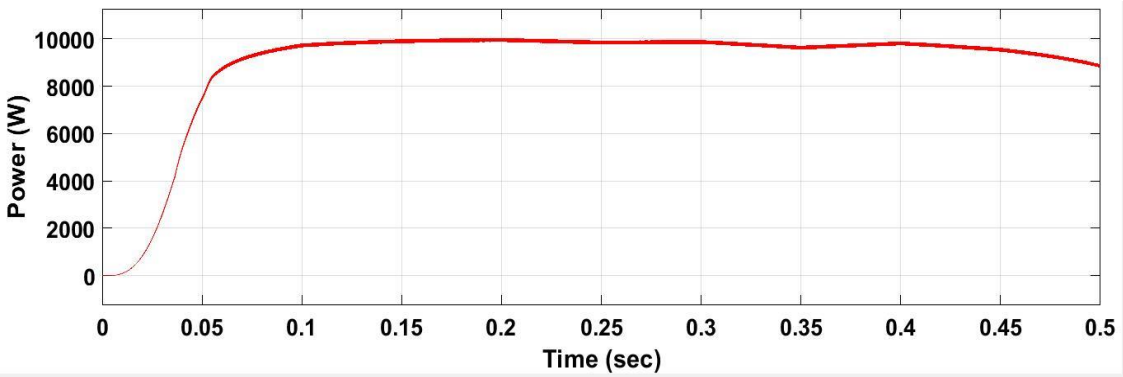

Fig.18. Boasted Output Power V-I graph using FLC-based MPPT.

After the completion of the simulation the output current and voltage boasted are 944 volts and 9.44 ampere this is depending on the Maximum uncertainty signal the voltage and current are not fixed it varies with the input to the PV Module. The increase noticed in the output is shown in Fig.18 of the proposed Method. There is maximum power obtained by the use of fuzzy logic based MPPT controller. A clear comparison can be seen by comparing solar power and boasted power using an MPPT controller.

6. Conclusion

The design and operation of Fuzzy Logic Bases MPPT Controller under uncertain conditions have been considered in this paper. The model is designed using Matlab/SIMULINK. Many researchers used the P&O algorithm based MPPT system to control the output of the DC-DC boost converter. In this paper, the FLC based MPPT system has been presented and then the results of the proposed model has been compared with other conventional MPPT Method. The uncertain condition is provided to the PV module so as the testing of the model under the uncertain condition for both irradiance (solar Radiation) and temperature can be easily examined. The output result of the simulation shows that the method effectively tracks the Maximum power point under uncertain conditions. It also decreases the oscillation

around the maximum power point and also has a better response comparing to the conventional P&O Method. By comparing the efficiency of tracking maximum power in PV Module it indicated that the proposed method has higher efficiency than other P&O-based MPPT Method.

References

[1] Ting-Chung Yu and Tang-Shiuan Chien, "Analysis and Simulation of Characteristics and Maximum Power Point Tracking for Photovoltaic Systems", Proceedings of Power Electronics and Drive Systems Conference, pp. 1339 - 1344, Taipei, 2009.

[2] D. P. Hohm and M. E. Ropp, "Comparative Study of Maximum Power Point Tracking Algorithms using an experimental, programmable, maximum power point tracking testbed", Proceedings of Photovoltaic Specialists Conference, pp. 1699 - 1702, USA,2000.

[3] Jancarle L. Dos Santos, Fernando L. M. Antunes, and Anis Chehab, "A Maximum Power Point Tracker for PV Systems Using a High-Performance Boost Converter", Solar Energy, Issue 7, Vol. 80, pp. 772- 778, 2005.

[4] Trishan Osram and Patrick L. Chapman, "Comparison of Photovoltaic Array Maximum Power Point Tracking Techniques", Energy Conversion, Issue 2, Vol. 22, pp. 439 - 449, May 2007.

[5] Roberto Faranda, Sonia Leva, "Energy Comparison of MPPT techniques for PV Systems", Wseas Transactions on Power System, Issue 6, Vol. 3, pp. 446- 455, June 2008.

[6] V. Salas, E. Olias, A. Barrado, A. Lazaro, "Review of the Maximum Power Point Tracking Algorithms for Stand-alone Photovoltaic Systems", Solar Energy Materials and Solar Cells, Issue 11, Vol. 90, pp. 1555- 1578, July 2008.

[7] Walker Geoff, " Evaluating MPPT Converter Topologies Using a Matlab PV Model ", Journal of Electrical & Electronics Engineering, Vol. 21, No. 1, pp. 49-55, 2011.

[8] C. Larbes, S.M. Aı¨t Cheikh*, T. Obeidi, A. Zerguerras, " Genetic algorithms optimized fuzzy logic control for the maximum power point tracking in the photovoltaic system", Renewable Energy, Vol. 34, Issue 19, pp. 2093-2100-55, 2009.

[9] Castañer, Luis & Santiago Silvestre "Modelling Photovoltaic Systems using PSpice", John Wiley & Sons Ltd, 2002.

[10] Tavares, Leite, Suemitsu, Bellar, " Performance evaluation of photovoltaic solar system with different MPPT methods", Proceedings of Industrial Electronics Conference, pp. 719-724, 2009.

[11] Mohan, Undeland and Robbins, "Power Electronics Converters, Applications and Design" Third Edition, 2003.

[12] Altin N, Ozdemir S. Three-phase three-level grid-interactive inverter with fuzzy logic based maximum power point tracking controller. Energy Convers Manag 2013;69:17e26.

[13] Ozdemir S, Altin N, Sefa I. Single-stage three-level grid-interactive MPPT inverter for PV systems. Energy Convers Manag 2014;80:561e72.

[14] Salas V, Olias E, Barrado A, Lazaro A. Review of the maximum power point tracking algorithms for stand-alone photovoltaic systems. Sol Energy Material Sol Cells 2006;90(11):1555e78.

[15] Osram T, Chapman PL. Comparison of photovoltaic array maximum power point tracking techniques. IEEE Transaction Energy Convers 2007;22(2):439e49.

[16] Khateb AE, Rahim NA, Selvaraj J, Uddin MN. Fuzzy-logic controller-based SEPIC converter for maximum power point tracking. IEEE Trans Industry Appl 2014;50(4):2349e58.

[17] Anurag A, Bal S, Sourav S, Nanda M. A review of maximum power-point tracking techniques for

photovoltaic systems. Int J Sustain Energy 2016;35(5):478e501.